# Model TC-9 Low Blank Furnace

Operation and Maintenance Manual

By
Pond Engineering Laboratories, Inc.
2401 South County Road 21
Berthoud, CO  80513
(303) 651-1678
www.pondengineering.com

Rev. Oct 2015

# Table of Contents

# TC-9
# Low Blank Furnace

## 1. Background

This manual documents the installation, operating and maintenance procedures for the Pond Engineering TC-9 Low Blank Furnace. Information contained in this manual is proprietary to Pond Engineering Laboratories and is provided for use by the purchaser exclusively for instructional and maintenance purposes. Any other uses are prohibited.

All Figures are for a general visualization and may vary.

## 2. General Information and Operating Procedures

### 2.1 Operating Environment

#### 2.1.1 Temperature

For optimum performance, the system should be located in an air conditioned room in the range of 18 and 22°C (65 and 72°F).

#### 2.1.2 Humidity

The relative humidity of the operating environment should not exceed 60%. The atmosphere should be non-condensing and non-corrosive.

#### 2.1.3 Water Cooling

Use of the furnace without cooling water is not recommended, and can result in extremely high temperatures on exposed surfaces, increasing the potential for physical injury to the operator and/or damage to the internal components of the furnace. To prevent these conditions, the furnace must be connected to a cooling water supply capable of providing at least 6 LPM flow rate and dissipating at least 4.8 kilowatts of heat from the cooling water during steady-state operation.

#### 2.1.4 Altitude

This system is designed for indoor use at an altitude of up to 6500 ft (2000 m) above sea level. For altitudes exceeding this specification, contact Pond Engineering.

### 2.2 Power Requirements

| | |
|---|---|
| **Nominal voltage** | Single phase; 230V ±10%, 50/60 Hz |
| **Wire** | Single phase, 3-wire configuration - 12AWG; L1, L2, Gnd |
| **Fuses** | Heater Power: 20A Time Delay<br>Controller Power: 2A Time Delay |
| **Cord end** | NEMA 6-20 when delivered to domestic USA locations<br>Labeled flying leads when delivered to foreign locations |
| **Power consumption** | Transient: ≈ 4.8 kW<br>Steady State Operation @ Max Temp: ≈ 3.6 kW |

### 2.3 General System Layout

**Figure 1** shows the general configuration of the system and provides a general reference for location of connection / service points discussed later in this manual.

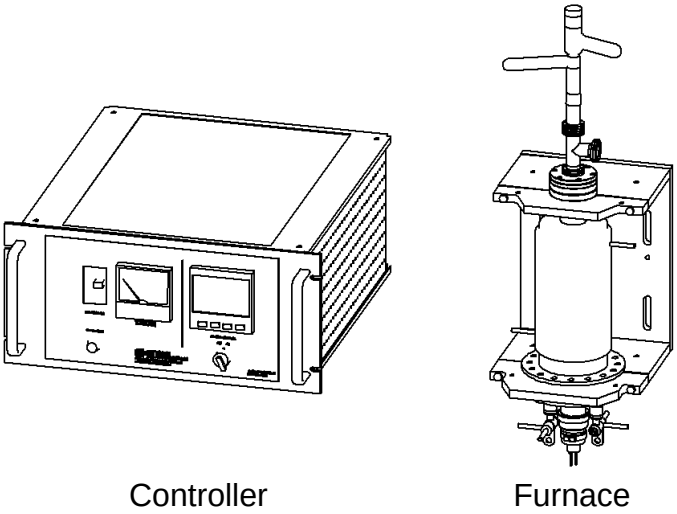


**Figure 1 – General System Layout**

The controller is connected to the furnace with #2 AWG Copper Leads. The lead length is 10 feet standard, with additional available on request. Power input for the controller is 220 VAC @ 60 Hz. Other configurations are also available on request.

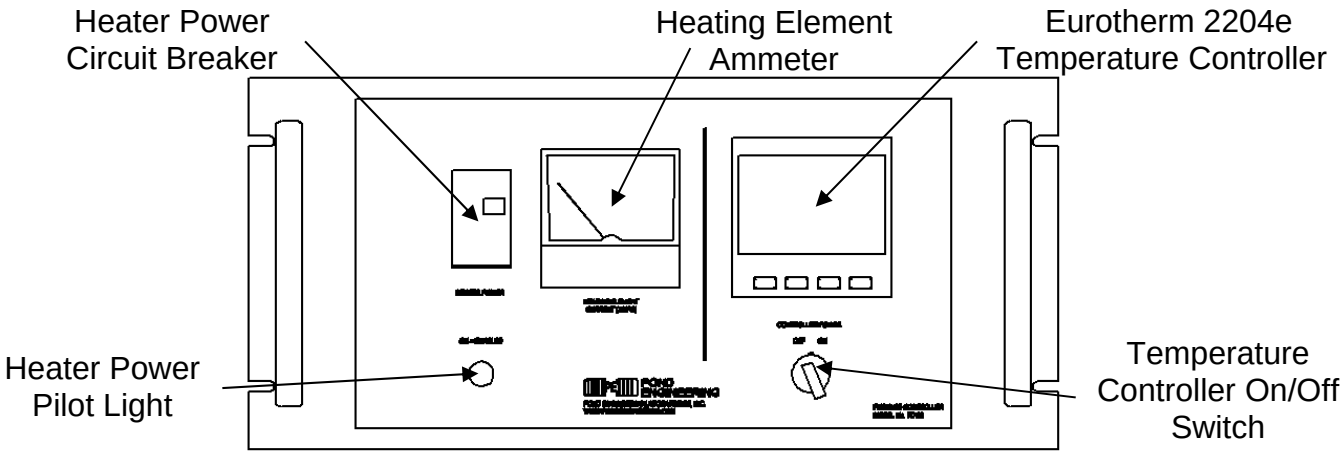


**Figure 2 - Front Panel Layout**

**Figure 2** shows the front panel layout. The panel is divided into two sections. The left is for heating element power, and the right is for the controller. The Eurotherm Temperature Controller allows the user to specify setpoints, user-defined alarms, and view current thermocouple temperature. A full User Manual and parameter list for the Eurotherm controller can be found in **Appendix B.**

NOTE: For temperature controller testing, the breaker can be switched off so that no power is going to the furnace while adjustments are made.

WARNING: Before startup, evacuate cooling envelope and crucible, and connect water cooled vacuum envelope and power feedthroughs to a water cooling unit.

# 3. Quick Start Guide

## 3.1 Assembling the System

The system is packaged in several separate boxes, each labeled with its contents. Furnace assembly is begun by unpacking the box containing the base flange, power feed-thrus, filament clamps and cooled terminal clamps, and orienting as shown in **Figure 3**.The power feed-thrus use six 8-32 socket head cap screws, tightened 1/8 turn past first contact. Line up the planes of the filament clamps, and clamp flush with top of feed-thrus using 8-32 x ½" socket head cap screws. It is convenient to support the base flange using three bolts in the peripheral holes with nuts on both sides of the flange, also shown in **Figure 3**, these bolts are not provided.

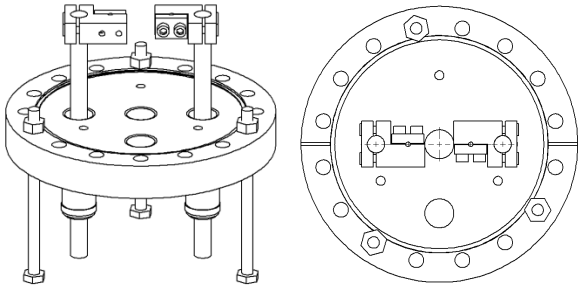

**Figure 3 – Base Flange Orientation**

Note: Many of the components are mounted with CF flanges. Please mount using appropriate copper gaskets and tighten hardware adequately.

After setting up the base flange, locate the three ¼-20 molybdenum all-thread rods and thread them into the tapped holes on the top of the flange. After tightening the molybdenum rods, thread one molybdenum nut, followed by three ceramic insulators onto each rod as shown in **Figure 4**. Adjust the nut until the top of the third insulator is roughly ¼" above the top of the filament clamps.

**Tip:** When threading all-thread rods in, jamb two nuts at the top to use a wrench for tightening all-thread. This makes the rods more stable.

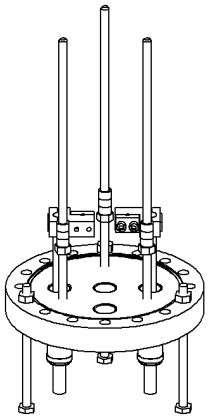

**Figure 4 – Base Flange with All-Thread Rods, Nuts, and Insulators**

The next step is to mount the molybdenum shields. Locate the two lower shields and slip them over the molybdenum rods, and adding insulators as shown in **Figure 5** (The tapped holes for the rods are not equilateral, make sure to align the shields with the prick marks exactly as shown).

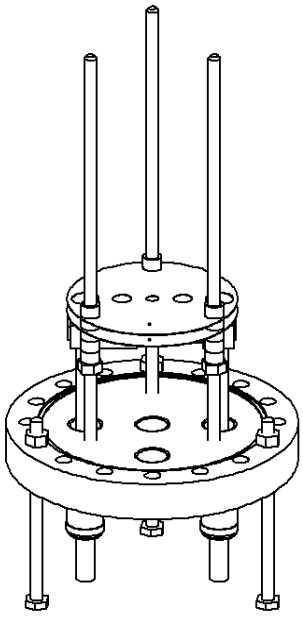

**Figure 5– Base Flange with Lower Shields**

After placing the two lower shields, locate the tungsten heating element. The two leads on the heating element go through the holes in the lower shields and are mounted in the clamps just below them as shown in **Figure 6**.

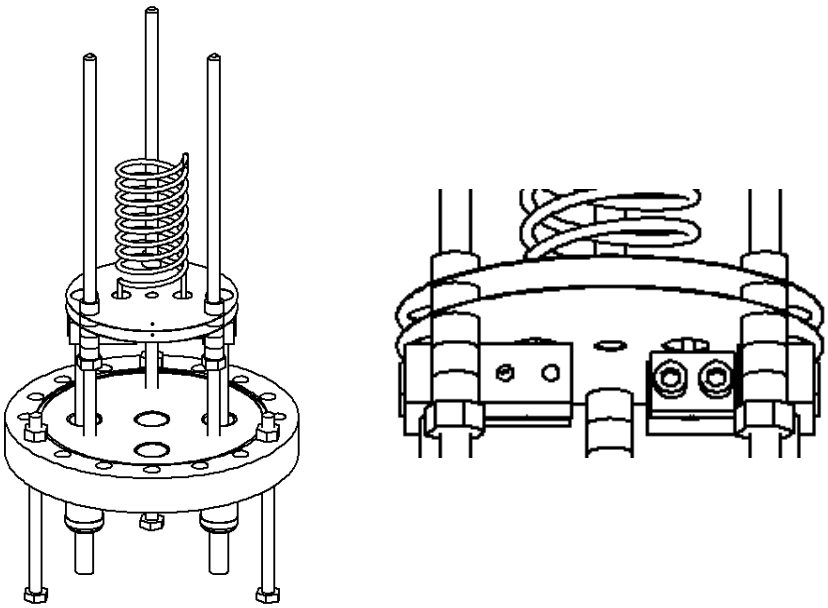

**Figure 6– Mounting the Heating Element**

After mounting the heating element, continue to place the shields, nuts, and insulators over the molybdenum rods as shown in **Figure 7**.

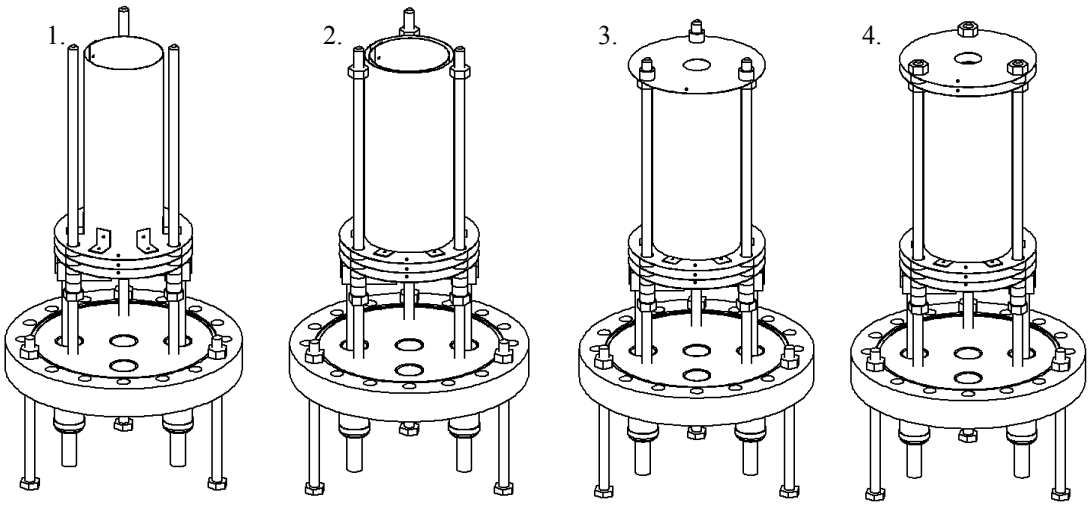


**Figure 7– Mounting the Remaining Shields**

Now that the shields are mounted, the next step is to mount the furnace into the water cooled vacuum envelope. To do this, the upper nuts on the three bolts used to support the base flange must be removed and the envelope slipped over the furnace as shown in **Figure 8**. Once the envelope is over the furnace, fasten the two flanges together with the provided plate nuts, leaving the flange supports in place. It is convenient to use washers on the downward facing surface, and nut plates on the upward facing surface as shown in the figure below.

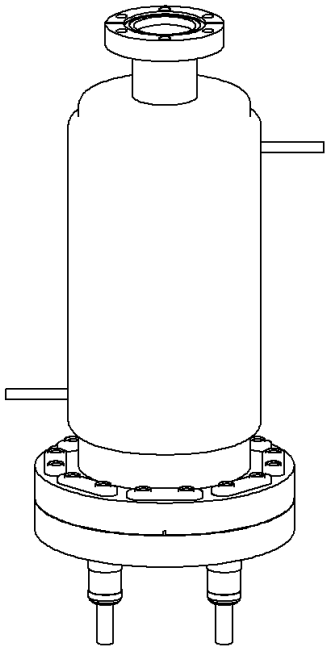

**Figure 8– Mounting the Water Cooled Vacuum Envelope**

**Figure 9** shows the furnace bracket assembly process.

Note: Leave the outer halves of the clamps off until the next step.

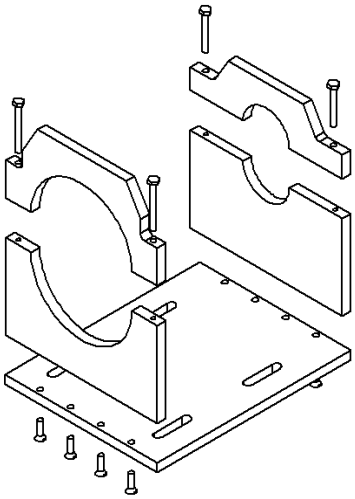

**Figure 9– Assembling the Furnace Bracket**

After the bracket is assembled, the flange support bolts can be removed and the furnace (in water cooled vacuum envelope) mounted into the bracket as shown in **Figure 10**. The upper and lower clamps on the bracket should bear on the flanges at the top and bottom of the water cooled vacuum envelope, allowing easy removal of subsequently attached flanges.

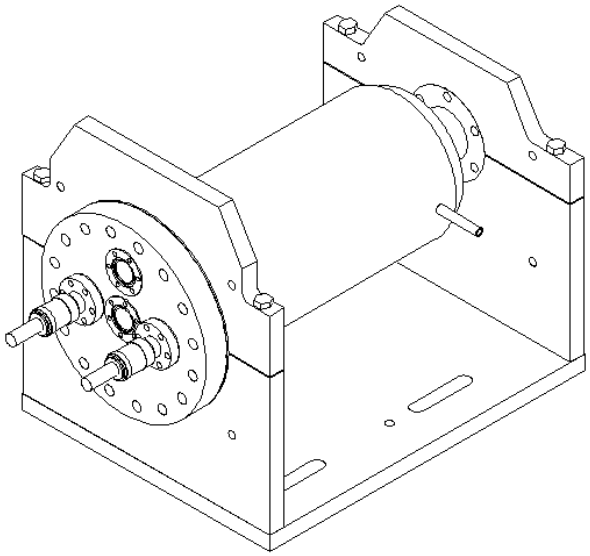

**Figure 10– Mounting the furnace into the bracket**

Once the furnace is mounted in the bracket, the crucible, flange adaptor, extraction line, and glassware can be mounted to the top of the assembly as shown in **Figure 11**. The furnace is shown upright for ease of illustration, but can be in any position for assembly, and is frequently mounted in its final operating position.

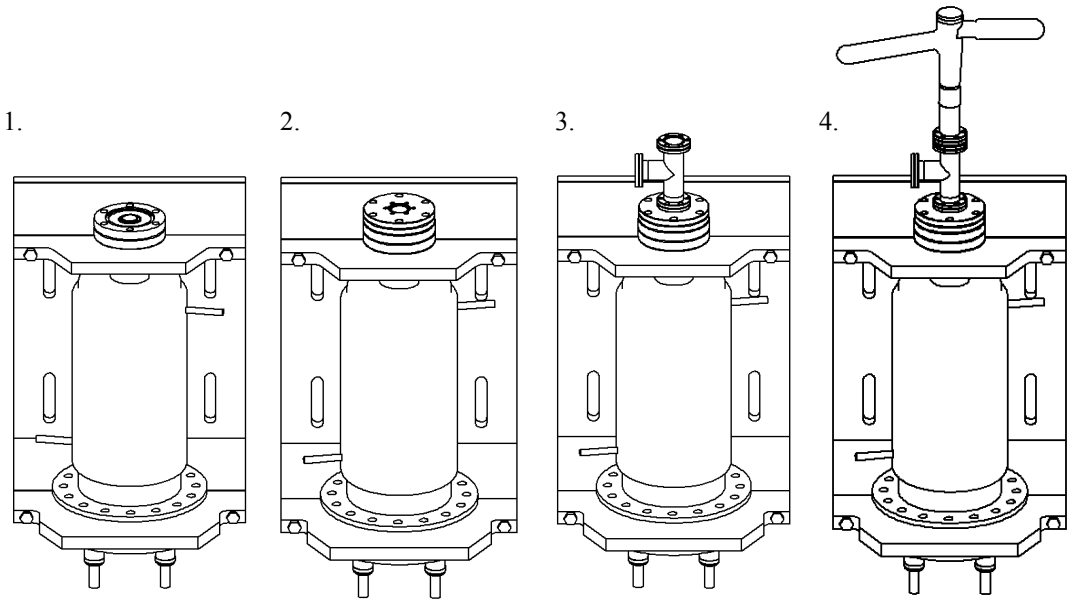


**Figure 11– Mounting the crucible, extraction line, and glassware**

After the crucible, extraction line, and glassware are mounted, the thermocouple and adjuster need to be mounted. First, mount the bellows with the rotating flange toward the base flange as shown in **Figure 12**, using six silver plated 8-32 x ½" allen head screws. DO NOT use washers on the bellows or thermocouple, as they will interfere with the mounting of the adjuster. The water cooled power connectors are more conveniently attached any time after the bellows and adjuster.

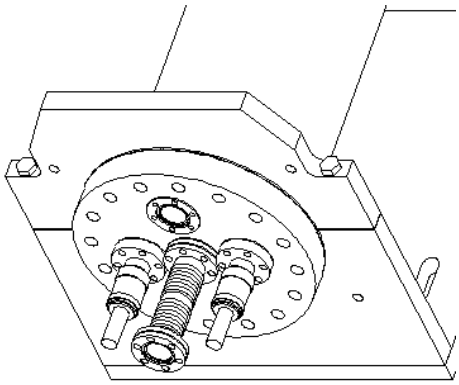

**Figure 12- Mounting the bellows and water cooled power connectors**

After mounting the bellows, the thermocouple itself can be mounted with six silver plated 8-32 x ¾" allen screws. Once the thermocouple is mounted, the threaded adjuster can be mounted. The adjuster is oriented with the longer aluminum piece toward the base flange, and the flats lined up with the power feed-thru flanges. It is convenient to orient the adjuster so that the mounting clamp screw is opposite the vacuum pumpout flange as shown in **Figure 13**. Before tightening the upper clamp thread the upper portion of the adjuster so the top lines up with the top bellows flange and tighten.

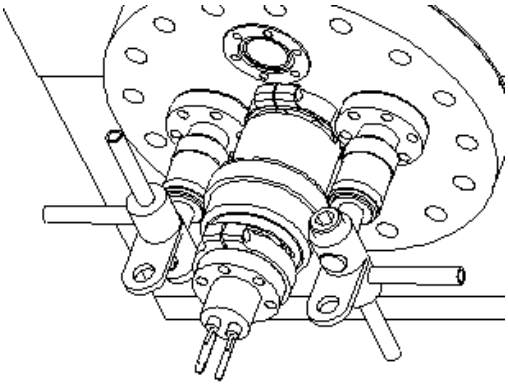

**Figure 13- Thermocouple, Adjuster, and Water Cooled Power Terminal**

The adjuster is designed to be able to move the thermocouple up to the crucible until it barely touches. A convenient way to determine when it does touch is to connect one lead of a digital multimeter to the thermocouple and the other to a screw on the mounting bracket. Once the thermocouple touches, the multimeter will display a value for resistance. If the thermocouple is jammed too much into the crucible they will fuse together. To prevent the thermocouple and crucible from fusing it is a good practice to adjust the thermocouple till it loses conductance and slowly adjust until it barely touches. At this point, the furnace is ready for evacuation.

### 3.2 Initial Power-up and Checkout

BEFORE POWER-UP:

1. Ensure vacuum levels on furnace and crucible.
2. Verify cooling water to power feedthoughs and envelope.
3. Verify no short between feed-thru and lower shield, and form adjust as required
4. Verify crucible liner in place when necessary.

### 3.3 Normal Furnace Operation

To turn on the Eurotherm controller, turn the switch labeled “Controller Power” to the “On” position. If the thermocouple is connected, the screen should display the current temperature of the thermocouple. The temperature setpoint is set by pressing the up and down arrow keys on the controller. This can be done with or without the heater power being engaged. To apply power to the heating element, switch the circuit breaker labeled “Heater Power” to the “On” position. When power is initially applied to the heating element, the normal current draw is more than 250 A. Within about 5 seconds, the heating element should warm up, and the current should drop down to 150 A.

## 4. System Controller

Detailed descriptions of the controller functions and system setup are provided in **Appendix A**.

## 5. Optional Configurations

Numerous automated sample handling and valve configurations have been devised and are available from Pond Engineering on special order. Please contact Pond Engineering for additional details.

## 6. System Hardware Description

A brief description of system hardware is provided in this section as a reference to aid the user with periodic maintenance of the system. In the event that significant maintenance or repair is required, it is recommended that Pond Engineering be contacted prior to replacing or modifying major system components.

## 6.1 Furnace

| ITEM | QTY | PART NUMBER | DESCRIPTION |
|---|---|---|---|
| 1 | 1 | TC-10 | Niobium Crucible |
| 2 | 1 | TC-11 | Heating Element |
| 3 | 1 | TC-12 | Thermocouple |
| 4 | 1 | TC-20 | Furnace Mounting Bracket |
| 5 | 1 | TC-23 | Glass Sample Holder w/ Mini Flange and Window |
| 6 | 1 | TC-32 | Full Internal Kit |
| 7 | 1 | TC-53 | Furnace Base Flange |
| 8 | 2 | TC-54 | Insulated Power Feed Thrus |
| 9 | 2 | TC-55 | Heating Element Mounting Clamps |
| 10 | 1 | TC-9_A439 | Bellows and Thermocouple adjuster |
| 11 | 1 | TC-9_H100 | 2-3/4" to 1-1/3" CF Flange |
| 12 | 1 | TC-9_H101 | 1-1/3' CF Tee |
| 13 | 1 | TC-9_M012 | Water Cooled Vacuum Envelope |

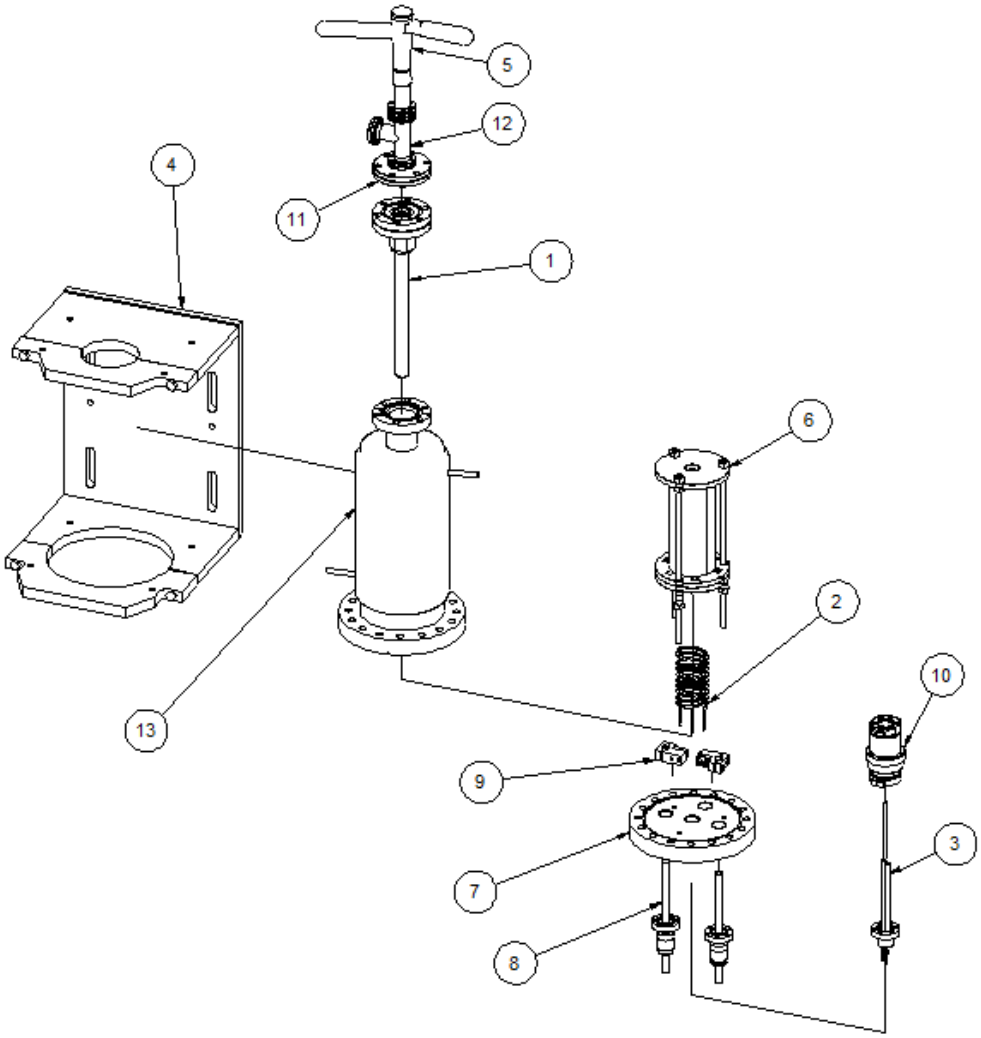

### 6.1.1 Full Internal Kit

| ITEM | QTY | PART NUMBER | DESCRIPTION |
|---|---|---|---|
| 1 | 1 | TC-9_A105 | Shield, Inner |
| 2 | 2 | TC-9_M004 | Shield, Upper |
| 3 | 2 | TC-9_M006 | Shield, Lower |
| 4 | 1 | TC-9_M010 | Shield, Outer |
| 5 | 3 | TC-9_M025 | Stud, Shiled Mounting |
| 6 | 9 | TC-9_M301 | Nut, Shield Mounting |
| 7 | 18 | TC-9_M307 | Spacer, Shield |

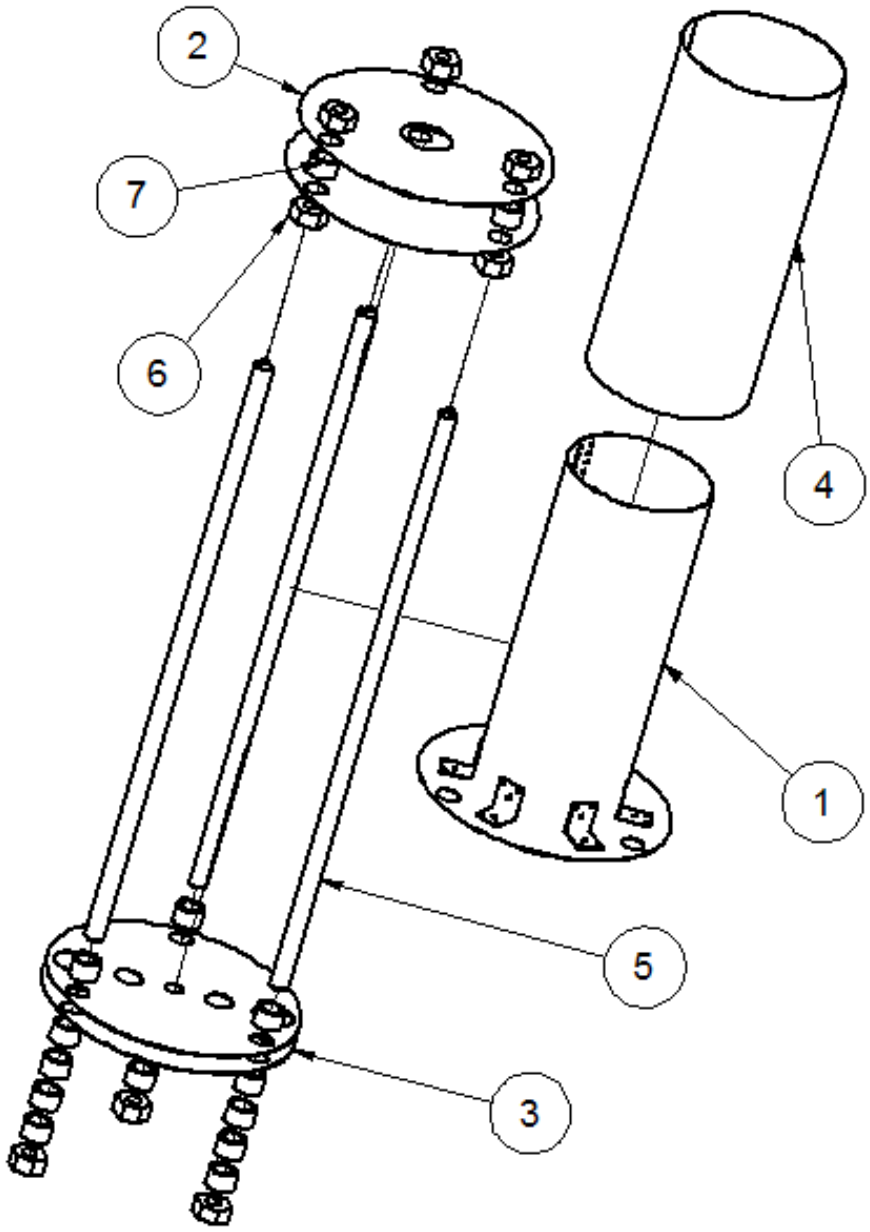

### 6.1.2 Full Shield Kit

| ITEM | QTY | PART NUMBER | DESCRIPTION |
|---|---|---|---|
| 1 | 1 | TC-9_A105 | Shield, Inner |
| 2 | 2 | TC-9_M004 | Shield, Upper |
| 3 | 2 | TC-9_M006 | Shield, Lower |
| 4 | 1 | TC-9_M010 | Shield, Outer |

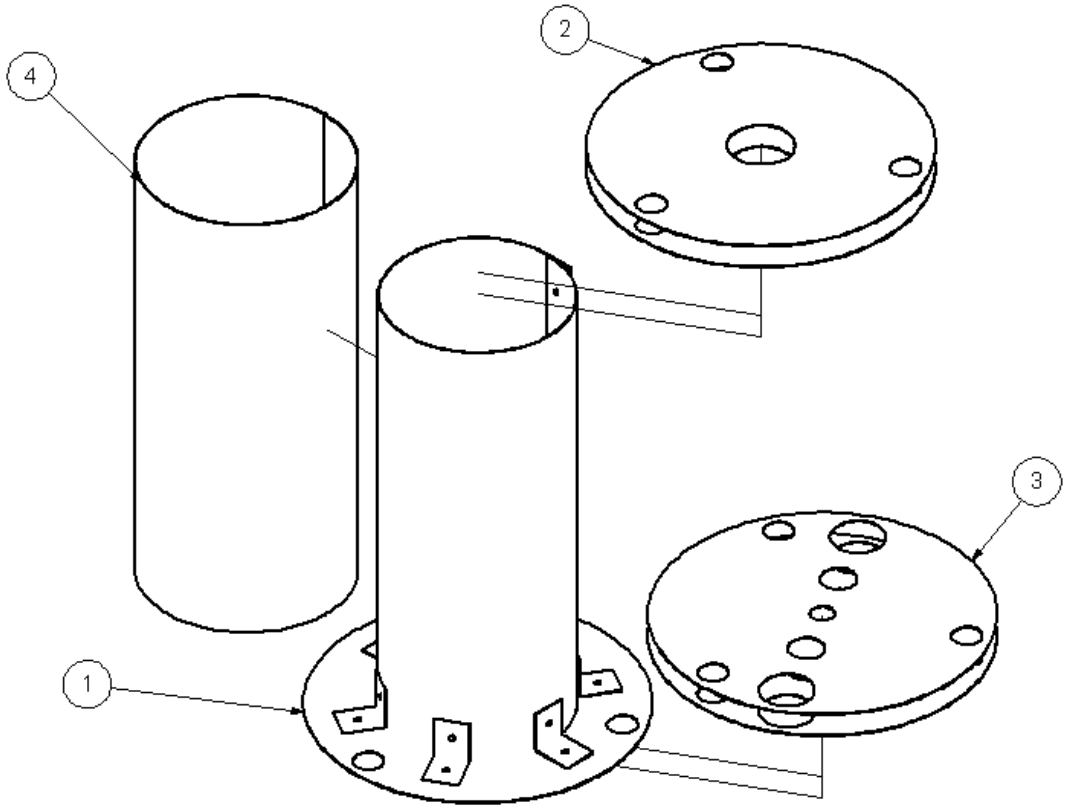

## 6.2 Controller

| ITEM | QTY | PART NUMBER | DESCRIPTION |
|---|---|---|---|
| 1 | 1 | TC-22_A001 | TC-22 Faceplate |
| 2 | 1 | TC-22_A002 | Techmar Enclosure |
| 3 | 1 | TC-22_H101 | Omega MFO Series 200:5 Current Transformer |
| 4 | 1 | TC-22_H102 | Signal Transf. 230V/115V-24V/12V, 100A/200A (24-100) |
| 5 | 1 | TC-22_H103 | Thermocouple Hookup, PN: MPJ-C-F |
| 6 | 1 | TC-22_H104 | Square-D Brkr 2-pole, 15A w/shunt trip (QOU2151021) |
| 7 | 1 | TC-22_H105 | Simpson Ammeter 0-200A scale, 0-5A coil |
| 8 | 1 | TC-22_H107 | Eurotherm PID Controller 2204e |
| 9 | 1 | TC-22_H108 | Eurotherm Solid State SCR asm. 25A 230V |
| 10 | 1 | TC-22_H204 | Allen Bradley 800MR-HX2B w/ 800M-XA2K Contact Block |
| 11 | 1 | TC-22_H205 | Allen Bradley Small Pilot Light, PLI-22NCG-220V or equal |
| 12 | 2 | TC-22_H206 | Phoenix Contact Typ UK 5-HESI (5X20mm) or equal |
| 13 | 1 | TC-22_H207 | BUSS CHM2I or equal w/ 20A 250V Slow 10x38mm fuse |
| 14 | 2 | TC-22_H208 | Phoenix Contact Typ USLKG 5 or equal |
| 15 | 2 | TC-22_M204 | DIN rail |

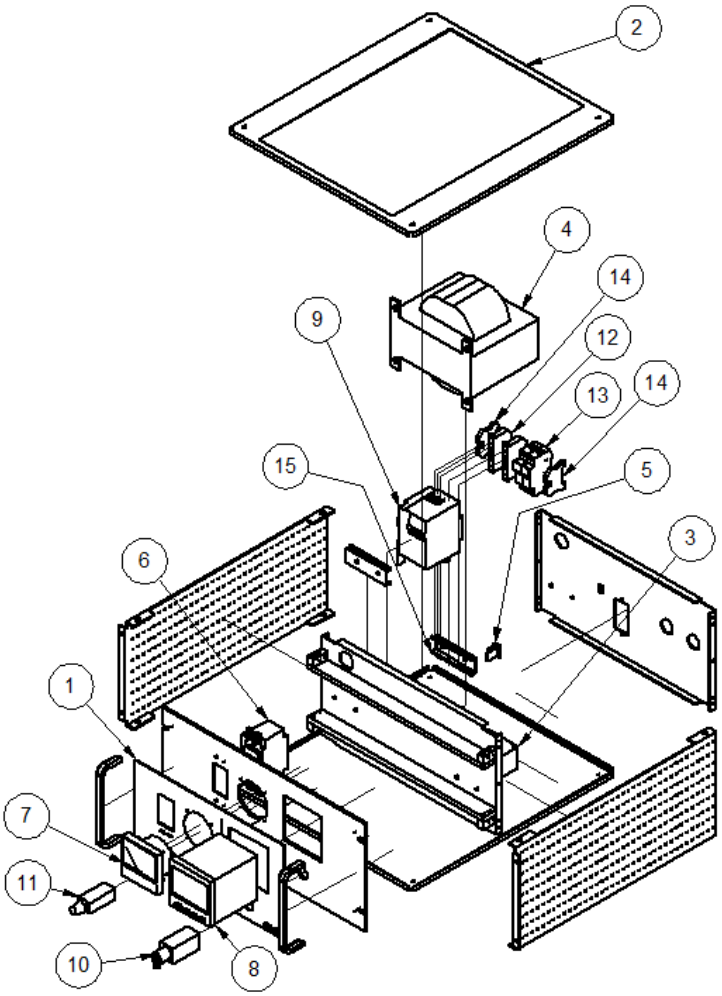

# 7. Appendix A

TC-22 Schematics

# 8. Appendix B

2204e Manual